950 Feller Buncher (10BA1294 - 009003)

TW13555 A.1

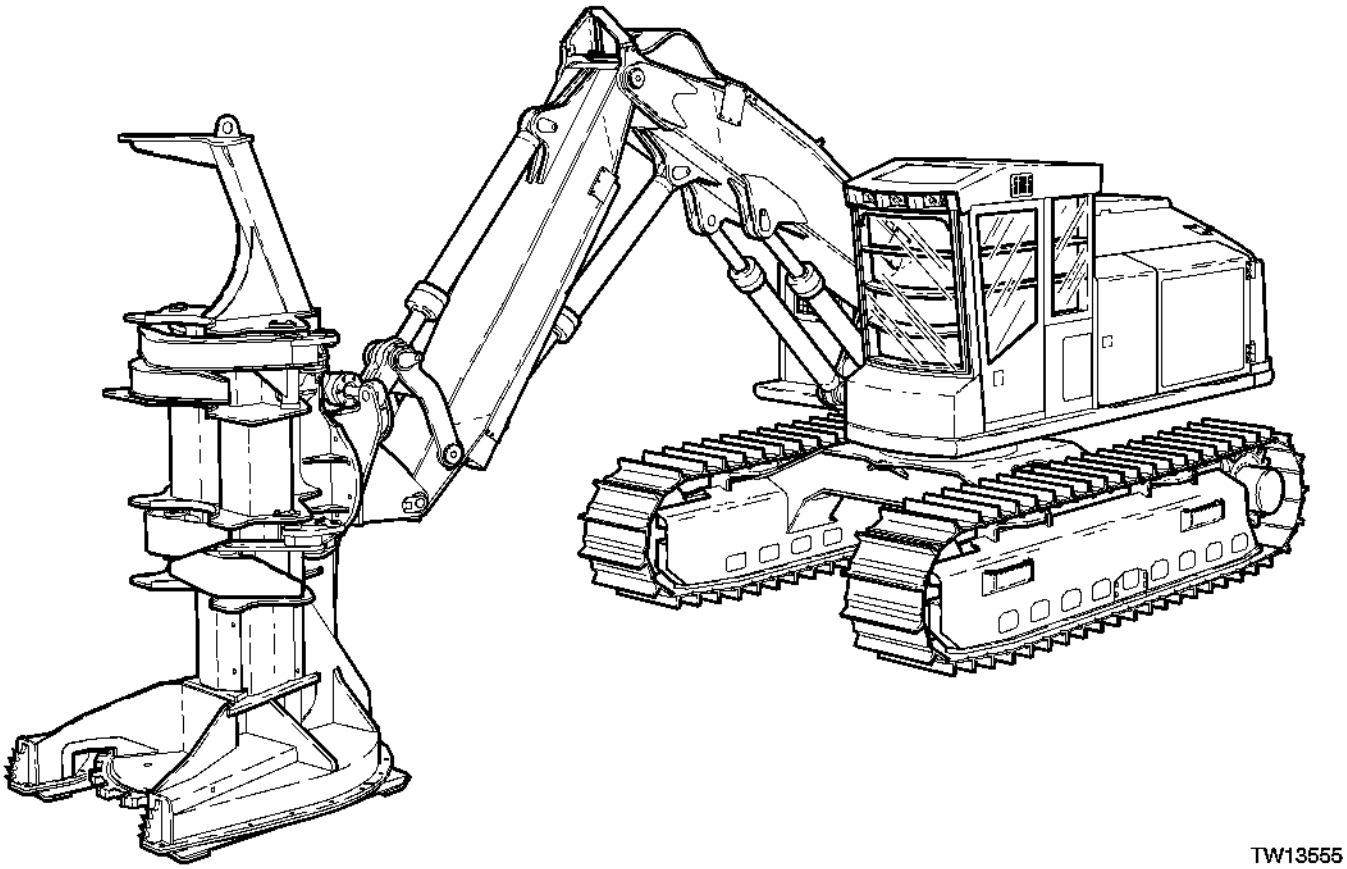

Timberjack 950 Feller-Buncher

(Manufactured 2001-2002)

(Specifications And Design Subject To Change Without Notice.)

To the Customer

The part numbers in this parts catalog were correct at the time your catalog was published. It is our policy to constantly improve our machines, and therefore, part numbers may change. When ordering parts, verify part numbers through your dealer.

SI Units of Measure

Metric dimensions are given, where applicable, throughout this parts catalog.

Bolt and Cap Screw Strength Identification

Bolts and cap screws required to have high-strength qualities equivalent to SAE grade 8 are identified throughout this catalog by the description HS SAE 8 (10.9 for metric). All standard bolts and cap screws are SAE grade 5 (metric 8.8) or lower.

Serial Number Listing Information

Serial number information is listed to show on which machines each part can be used; for example:

	–		The part can be used on all products.
000000	–		The part can be used on products beginning with the serial number listed.
	–	000000	The part can be used on products up to and including the serial number listed.
000000	–	000000	The part can be used on products between and including the serial number listed.

When XXXXXX's are listed in place of a serial number, a serial number change was made, but the exact serial number was not available when the catalog was produced.

If product identification numbers or serial numbers are required for warranty claims or correspondence pertaining to this product, it is extremely important that all characters be furnished. This point cannot be overemphasized.

Direction Arrow

Arrows are used with illustrations to indicate the front of the unit. “Right-Hand” and “Left-Hand” sides are determined by facing in direction of machine forward travel.

Box-enclosed Illustrations

A key number, shown in the parts list, is assigned to a box enclosing all parts sold as a service assembly. A box not keyed includes non-current parts.

Complete Goods Listings

Complete Goods are listed in bold face type. Order separately. Do not include on replacement part order.

Orientation of Engine

“Right Hand” and “Left Hand” sides are determined by standing at the flywheel and facing the engine.

John Deere Reman Components

The service parts listed in this catalog are intended for the repair of original equipment components. Although most service parts may be used to repair remanufactured components, the remanufacturing process may change parts sufficiently so that service parts are inadequate or not usable.

Product Identification Plate

A.1

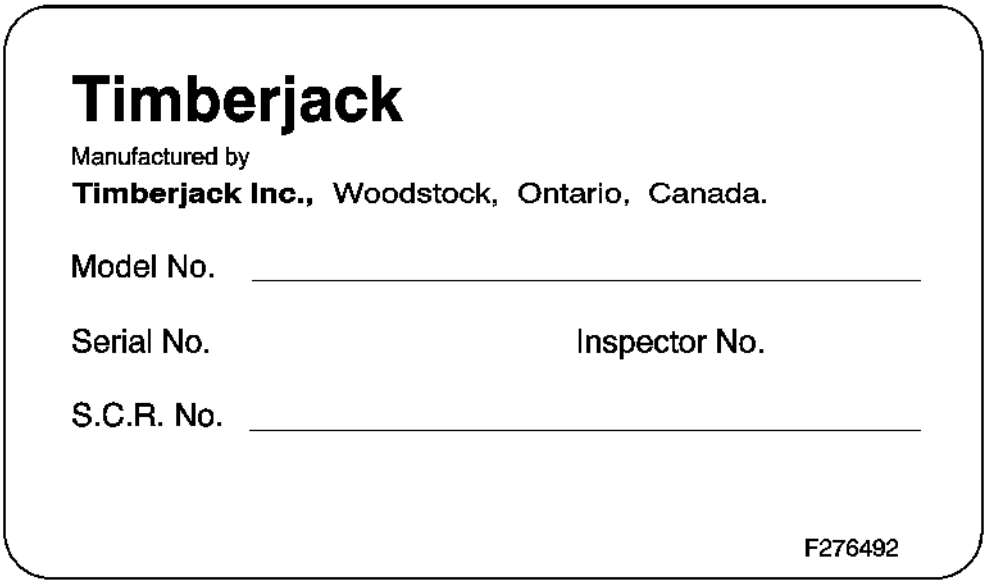

TW52919

Above Plate Can Be Located Inside The Cab On A Bracket Attached To The Seat Pedestal

Trademarks

Throughout this parts catalog, you may find the following Deere and Company trademarks:

Best Bid™	CounterParts™	DEERE™ (Deere™)
Dura-Trax™	Fanggs™	Guardian™
HTH™	Jagz™	JDLink™
MARKS™	MIC™ [Machine Information Center]	MTH™
Power Curve™	Powerllel™	PowerShift Plus™
Powerwize™	POWR SAVR™	PowrShift™
ProPath™	Quad-Cool™	Quik-Tatch™
SC-2™	Side-Tracker™	Stinger™
StructureALL™	Swamper™	TMC™ [Total Machine Control]
ValueSelect™	Waratah™	Worksite Pro™
FlexBox™	Funk™	iTorque™
Phoenix™	Phoenix International™	PowerTech™
PowerTech™ E	PowerTech™ M	PowerTech™ Plus
Precision Joint™	SHIFT-O-MATIC™	SWEDA™ (Super Wide Extreme Dual Axle)
TeamMate™	TeamMate™II	TeamMate™ IV
TMII™	TMIII™	

Remarks and Abbreviations

The following remarks and abbreviations may appear throughout this parts catalog. Refer to the following table for translations.

Phrase	Meaning		Phrase	Meaning
ALSO ORDER, ORD W/	Also Order		MFWD	Mechanical Front Wheel Drive
AMP	Ampere		NA, NOT USED THIS APPL	Not used in this application
APPL, APPL ONLY	This application only		NLA	No longer available
AR	As required		NSEP	Not available separately
ASSY	Complete assembly		OD	Outside diameter
BOAC	Bolt-on cutting edge		OPTIONAL	Optional
CCW	Counterclockwise		OR	Or
COMPLETE	Complete		ORD, ORDER	Order
COMPLETE GOODS	Complete goods		OS	Oversize
CONVENIENCE ASSY, CA	Convenience assembly		OUTER	Outer
CTL, CUT TO LENGTH	Cut to length		PKG, PACKG	Package, Packet of
CW	Clockwise		PTO	Power Take Off
ENGINE	Engine		RATIO	Ratio
FOR	For		REAR	Rear
FRONT	Front		REMAN	Remanufactured
GAS	Gasoline		REPL	Replaces
HFWD	Hydraulic Front-Wheel Drive		RH	Right-hand
HP	Horsepower		SN	Serial number
HS, HEAD MARKED	High Strength, head marked		STD	Standard
ID	Inside diameter		SUB	Replaced by
INCH	Inch		SUB COMPONENTS	Substitute components (of the kit or assy)
INCL KEYS	Includes keys…		SUB FOR	Substitutes for
INCL, INCLUDES	Includes…		TEETH, Z	Number of gear teeth
INCLUDES PARTS/ ITEMS MARKED	Includes parts/items marked…		TK	Thickness
INNER	Inner		UP, UPPER	Upper
KIT	Kit		US	Undersize
L	Number of links		USE UNTIL EXHAUSTED	Use until exhausted
LF, LINE FILL	Line Fill		USE WITH	Use with
LGP	Low Ground Pressure		VEC	Vehicle Electronic Controller
LGTH	Length		VLC	Vehicle Load Center
LT	Long Track		WHOLE GOODS	Whole Goods
MAKE FROM, MF	Make from		WT	Wide Tracks
MARKED	Marked		XLT	Extra Long Track
MATCHED SET	Matched set			